AERODROME GROUND MOVEMENT CHART - ICAO

APRON ELEV
4 M

TWR	121.1
SMC	121.6
	121.9
ATIS	126.4

PENANG/PENANG INTERNATIONAL AIRPORT

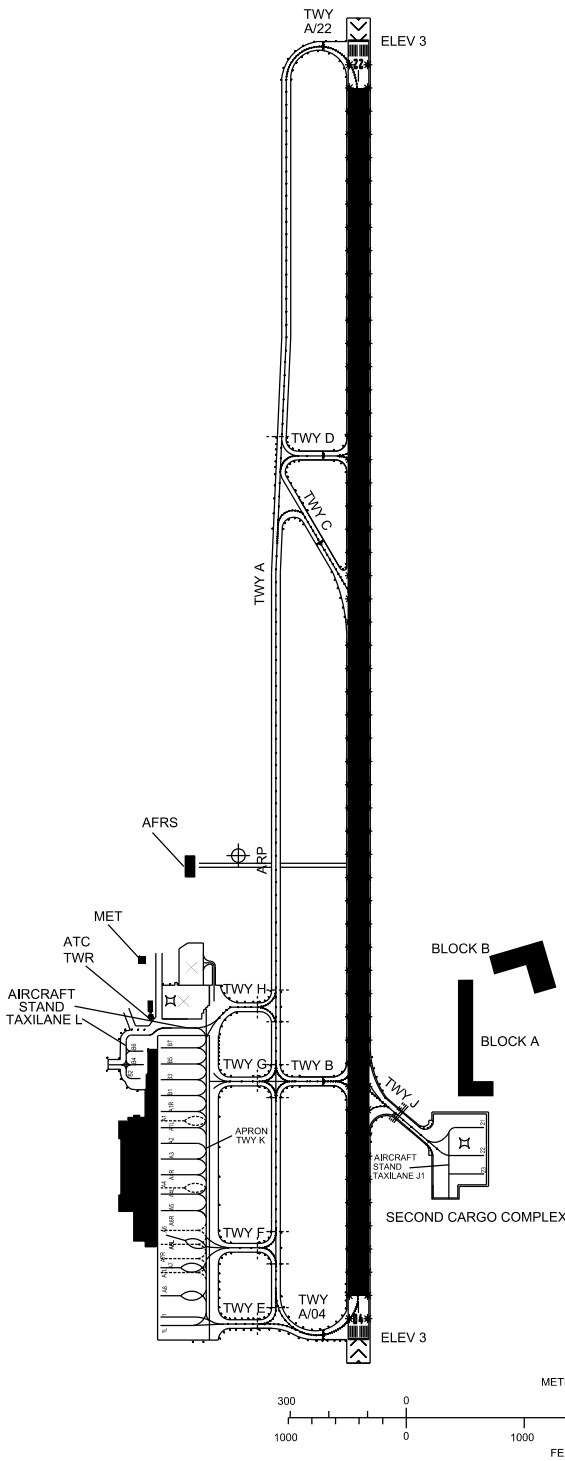

ANNUAL RATE OF CHANGE -0° 1' 18" W DECREASING
ELEVATIONS IN METRES
BEARINGS ARE MAGNETIC

N
VAR 0° W (2023)

TAXIWAY A, C AND E 23M WIDE
TAXIWAY A/04 AND A/22 30M WIDE
TAXIWAY B AND D 34M WIDE
TAXIWAY F AND H 31M WIDE
TAXIWAY G 32M WIDE
TAXIWAY J 25M WIDE
APRON TAXIWAY K 24M WIDE
AIRCRAFT STAND TAXILANE J1 48M WIDE
AIRCRAFT STAND TAXILANE L 24M WIDE

STANDARD TAXI ROUTE FOR B747-800 OPERATIONS ARE
TAXIWAYS A, E, A04, A22 AND PARKING IS BAY 1

BEARING STRENGTH TWY A PCR 74/F/A/W/T
BEARING STRENGTH TWY A/04 PCR 74/R/A/W/T AND PCR 74/F/A/W/T
BEARING STRENGTH TWY A/22 PCR 74/F/A/W/T
BEARING STRENGTH TWY B PCR 62/R/A/W/T AND PCR 62/F/A/W/T
BEARING STRENGTH TWY C PCR 63/F/A/W/T
BEARING STRENGTH TWY D PCR 88/F/A/W/T
BEARING STRENGTH TWY E PCR 64/F/A/W/U
BEARING STRENGTH TWY F PCR 64/F/A/W/U
BEARING STRENGTH TWY G PCR 64/F/A/W/U
BEARING STRENGTH TWY H PCR 67/F/A/W/T
BEARING STRENGTH TWY J PCR 67/R/B/W/T
BEARING STRENGTH APRON TWY K PCR 132/R/D/W/U
BEARING STRENGTH AIRCRAFT STAND TAXILANE J1 PCR 67/R/B/W/T
BEARING STRENGTH AIRCRAFT STAND TAXILANE L PCR 67/F/A/W/T

BEARING STRENGTH APN BAY A1, A4, A6, A7, A8, 1, 1L PCR 1360/R/D/W/U
BEARING STRENGTH APN BAY A1R, A1L, A2, A3, A4R A4L, A5, PCR 685/R/C/W/U
BEARING STRENGTH APN BAY A6R, B1, B3, B5, B7, PCR 704/R/D/W/U
BEARING STRENGTH APN BAY A6L, A7R, A7L, PCR 157/R/C/W/U
BEARING STRENGTH APN BAY B2, B4, B6, PCR 116 F/B/C/X/U
BEARING STRENGTH APN BAY 21, PCR 801R/C/W/U
BEARING STRENGTH APN BAY 22, 23, PCR 715 R/B/W/U

TAXIWAY EDGE LIGHTS ON ALL CURVES
TAXIWAY CENTRELINE LIGHT ON ALL TAXIWAYS

LEGEND	
CONCRETE STRUCTURE	⌶
RUNWAY-HOLDING POSITION	≡
INTERMEDIATE HOLDING POSITION	---
CLOSED AREA	╳
RUNWAY LIGHT	✱
TAXIWAY LIGHT	·

CHANGES : UPDATE NEW AIRCRAFT PARKING BAY NO. 1L AND 1
UPDATE REMOVAL OF AIRCRAFT PARKING BAY NO. B9L, B9, B9R
UPDATE REMOVAL OF AIRCRAFT PARKING BAY NO. A9
UPDATE REMOVE H1 AND H2